DETOX TOILET - 4500

Item:_____

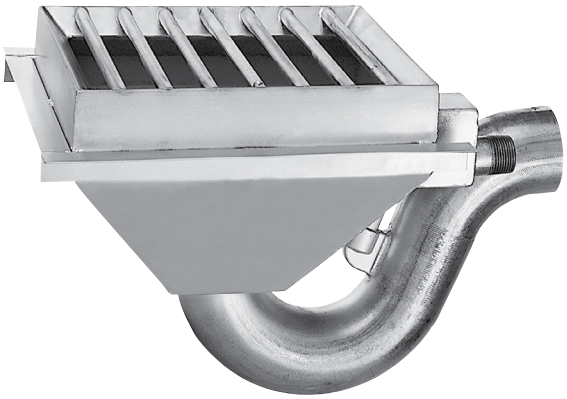

Unit may be pictured with some optional features.

❑ **4500** Detox Toilet

STANDARD FEATURES

- Blowout flushing action.
- Sanitary self draining full top flushing rim.
- Sump walls sloped to 3" (76mm) drain opening.
- 1/2" (13mm) dia. solid stainless steel bar grating.
- **Hardware-**
  - Anchoring flange.

OPTIONS & ACCESSORIES

OPTIONAL ACCESSORIES

❑ **A620** Wall mounted S/S flush valve box w/access panel.

NO-HUB CONNECTORS

❑ **A210-3** 3" s/s to 3" CI No-hub Connector.

❑ **A210-1** 3" s/s to 4" CI No-hub Connector

RECOMMENDED FLUSH VALVES		
SLOAN	ZURN	DELANY
110-HLC	Z6000-HLC	F538-T48 (MOD)

WARNING: Cancer and Reproductive Harm - www.P65Warnings.ca.gov.

► DESCRIPTION

Detox Toilets are designed for in-the-floor installation. They are fabricated using heavy gauge type 304 stainless steel, welded to form a vandal resistant toilet. The top flushing rim provides a full sanitary wash down of all sides. Vigorous flushing of the blowout type trap evacuates waste thoroughly. Solid stainless steel bars, 1/2" (13mm) dia., are welded to removable safety grate over sump. Safety grate is secured by stainless steel, vandal resistant security screws which permit removal for waste line cleaning.

► INSTALLATION

Detox Toilets are installed in the floor, usually when the slab is poured. The toilets are served by a remote flush valve installed outside the cell where the fixture can be flushed by corrections personnel. The fixture requires a 1" (25mm) water supply capable of sustaining a minimum 35 psi (241kpa) flushing pressure.

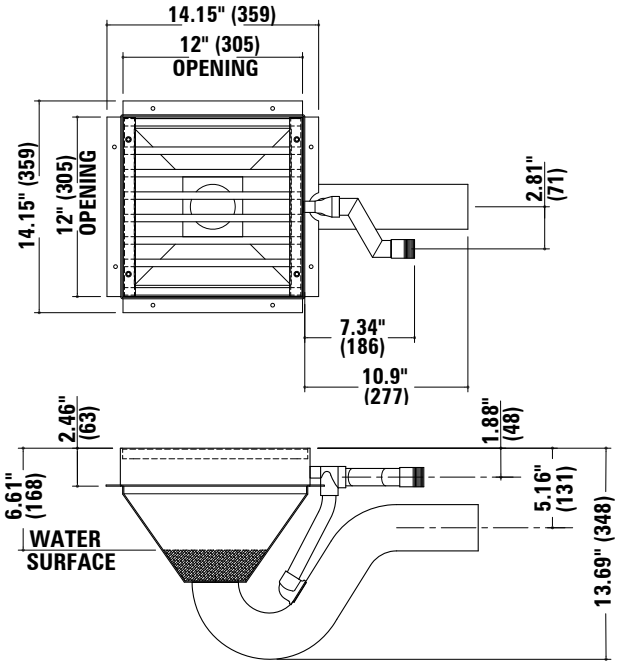

APPROVED FOR MANUFACTURING	Company:_____ Name:_____
	Signature:_____ Date:_____